Gravity wall analysis

Input data

Project : Sanacija plazu na LC 456 251 Leskovec - Cirkulane pri hiši Pristava 15
Description : Kamnita zložba
Customer : Občina Cirkulane
Author : GEOING d.o.o.
Date : 21/02/2025

Settings

Slovenia - EN 1997

Materials and standards

Concrete structures : EN 1992-1-1 (EC2)
Coefficients EN 1992-1-1 : standard
Masonry (stone) wall : EN 1996-1-1 (EC6)

Wall analysis

Verification methodology : according to EN 1997
Active earth pressure calculation : Coulomb
Passive earth pressure calculation : Caquot-Kerisel
Earthquake analysis : Mononobe-Okabe
Shape of earth wedge : Calculate as skew
Allowable eccentricity : 0,333
Design approach : 2 - reduction of actions and resistances

Partial factors on actions (A)					
Permanent design situation					
		Unfavourable		Favourable	
Permanent actions :	γ_G =	1,35	[–]	1,00	[–]
Variable actions :	γ_Q =	1,50	[–]	0,00	[–]
Water load :	γ_w =	1,35	[–]		

Partial factors for resistances (R)			
Permanent design situation			
Partial factor on overturning :	γ_{Rv} =	1,40	[–]
Partial factor on sliding resistance :	γ_{Rh} =	1,10	[–]
Partial factor on bearing capacity :	γ_{Re} =	1,40	[–]

Partial factors for variable actions			
Permanent design situation			
Factor for combination value :	ψ_0 =	0,70	[–]
Factor for frequent value :	ψ_1 =	0,50	[–]
Factor for quasi-permanent value :	ψ_2 =	0,30	[–]

Anchors

Verification methodology : Limit states (LSD)

Reduction coefficients			
Reduction. coeff of steel strength :	γ_s =	1,35	[–]
Reduction coefficient of pull out resistance (soil) :	γ_e =	1,35	[–]
Reduction coefficient of pull out resistance (grouting) :	γ_c =	1,35	[–]

[GEO5 - Gravity Wall (32 bit) | version 5.2024.120.0 | hardware key 10619 / 1 | GEOING d.o.o. | Copyright © 2024 Fine spol. s r.o. All Rights Reserved | www.finesoftware.eu]
[Geoportal d.o.o. | + 386(0)1 620 33 20| info@geoportal.si| http://www.geoportal.si]

Material of structure

Unit weight γ = 23,00 kN/m^3
Masonry : Category I
Mortar origin : Prescribed mortar

Masonry strength f_b = 2,00 MPa
Mortar strength f_m = 2,50 MPa

Parameters
Compressive strength f_k = 0,96 MPa
Shear strength f_{vko} = 0,10 MPa
Flexural tensile strength f_{xk} = 0,05 MPa
Partial factor γ_M = 2,20

Geometry of structure

No.	Coordinate X [m]	Depth Z [m]
1	0,00	0,00
2	0,00	0,05
3	0,00	3,78
4	-1,80	3,60
5	-1,80	3,30
6	-0,70	0,00

The origin [0,0] is located at the most upper right point of the wall.
Wall section area = 4,82 m^2.

Basic soil parameters

No.	Name	Pattern	φ_{ef} [°]	c_{ef} [kPa]	γ [kN/m^3]	γ_{su} [kN/m^3]	δ [°]
1	Glina		24,00	3,00	19,00	9,00	24,00
2	Lapor		34,00	30,00	23,00	13,00	34,00

Soil parameters to compute pressure at rest

No.	Name	Pattern	Type calculation	φ_{ef} [°]	v [–]	OCR [–]	K_r [–]
1	Glina		cohesive	-	0,40	-	-
2	Lapor		cohesive	-	0,20	-	-

Soil parameters

Glina
Unit weight : γ = 19,00 kN/m^3
Stress-state : effective
Angle of internal friction : φ_{ef} = 24,00 °
Cohesion of soil : c_{ef} = 3,00 kPa
Angle of friction struc.-soil : δ = 24,00 °
Soil : cohesive
Poisson's ratio : v = 0,40
Saturated unit weight : γ_{sat} = 19,00 kN/m^3

Lapor

[GEO5 - Gravity Wall (32 bit) | version 5.2024.120.0 | hardware key 10619 / 1 | GEOING d.o.o. | Copyright © 2024 Fine spol. s r.o. All Rights Reserved | www.finesoftware.eu]
[Geoportal d.o.o. | + 386(0)1 620 33 20| info@geoportal.si| http://www.geoportal.si]

Unit weight :	γ =	23,00 kN/m^3
Stress-state :		effective
Angle of internal friction :	φ_{ef} =	34,00 °
Cohesion of soil :	c_{ef} =	30,00 kPa
Angle of friction struc.-soil :	δ =	34,00 °
Soil :		cohesive
Poisson's ratio :	ν =	0,20
Saturated unit weight :	γ_{sat} =	23,00 kN/m^3

Geological profile and assigned soils

No.	Thickness of layer t [m]	Depth z [m]	Assigned soil	Pattern
1	2,50	0,00 .. 2,50	Glina	
2	-	2,50 .. ∞	Lapor	

Foundation

Type of foundation : soil from geological profile

Terrain profile

Terrain behind construction has the slope 1: 1,53 (slope angle is 33,11 °).
Embankment height is 1,50 m, embankment length is 2,30 m.

Water influence

Ground water table is located below the structure.

Input surface surcharges

No.	Surcharge new	Surcharge change	Action	Mag.1 [kN/m^2]	Mag.2 [kN/m^2]	Ord.x x [m]	Length l [m]	Depth z [m]
1	Yes		permanent	16,67		3,50	3,00	on terrain

No.	Name
1	Promet

Resistance on front face of the structure

Resistance on front face of the structure: at rest
Soil on front face of the structure - Glina
Soil thickness in front of structure h = 1,40 m

Terrain in front of structure is flat.

Settings of the stage of construction

Design situation : permanent
The wall is free to move. Active earth pressure is therefore assumed.
Reduction of soil/soil friction angle : do not reduce

Verification No. 1

Forces acting on construction

Name	F_{hor} [kN/m]	App.Pt. z [m]	F_{vert} [kN/m]	App.Pt. x [m]	Coeff. overtur.	Coeff. sliding	Coeff. stress
Weight - wall	0,00	-1,47	110,86	1,11	1,000	1,000	1,350
FF resistance	-12,02	-0,46	3,64	-0,24	1,000	1,000	1,350
Active pressure	34,11	-2,01	15,18	1,80	1,350	1,350	1,350
Promet	10,46	-2,17	6,02	1,80	1,350	1,350	1,350

[GEO5 - Gravity Wall (32 bit) | version 5.2024.120.0 | hardware key 10619 / 1 | GEOING d.o.o. | Copyright © 2024 Fine spol. s r.o. All Rights Reserved | www.finesoftware.eu]
[Geoportal d.o.o. | + 386(0)1 620 33 20| info@geoportal.si| http://www.geoportal.si]

Verification of complete wall

Check for overturning stability

Resisting moment M_{res} = 124,00 kNm/m
Overturning moment M_{ovr} = 117,80 kNm/m

Wall for overturning is SATISFACTORY

Check for slip

Resisting horizontal force H_{res} = 110,94 kN/m
Active horizontal force H_{act} = 33,67 kN/m

Wall for slip is SATISFACTORY

Overall check - WALL is SATISFACTORY

Maximum stress in footing bottom : 194,16 kPa

Name : Verification	Stage - analysis : 1 - 1

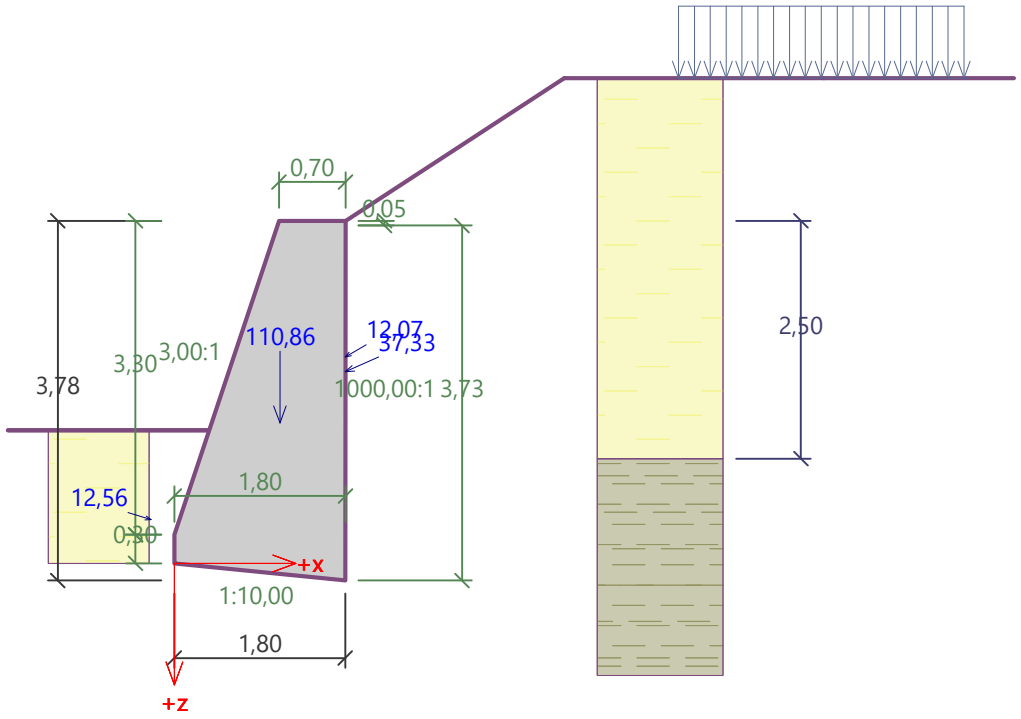

Bearing capacity of foundation soil

Design load acting at the center of footing bottom

No.	Moment [kNm/m]	Norm. force [kN/m]	Shear Force [kN/m]	Eccentricity [–]	Stress [kPa]
1	68,00	186,65	25,15	0,203	173,37
2	77,07	147,20	33,26	0,291	194,16

Service load acting at the center of footing bottom

No.	Moment [kNm/m]	Norm. force [kN/m]	Shear Force [kN/m]
1	50,37	138,26	18,63

Verification of foundation soil

Stress in the footing bottom : trapezoid

Eccentricity verification

[GEO5 - Gravity Wall (32 bit) | version 5.2024.120.0 | hardware key 10619 / 1 | GEOING d.o.o. | Copyright © 2024 Fine spol. s r.o. All Rights Reserved | www.finesoftware.eu]
[Geoportal d.o.o. | + 386(0)1 620 33 20| info@geoportal.si| http://www.geoportal.si]

Max. eccentricity of normal force e = 0,291
Maximum allowable eccentricity e_{alw} = 0,333

Eccentricity of the normal force is SATISFACTORY

Verification of bearing capacity

Ultimate bearing capacity of found. soil	R	=	400,00	kPa
Partial factor on bearing capacity	γ_{Rv}	=	1,40	
Max. stress at footing bottom	σ	=	261,98	kPa
Allowable bearing capacity of foundation soil	R_d	=	285,71	kPa

Bearing capacity of foundation soil is SATISFACTORY

Overall verification - bearing capacity of found. soil is SATISFACTORY

Name : Bearing cap. | **Stage - analysis : 1 - -1**

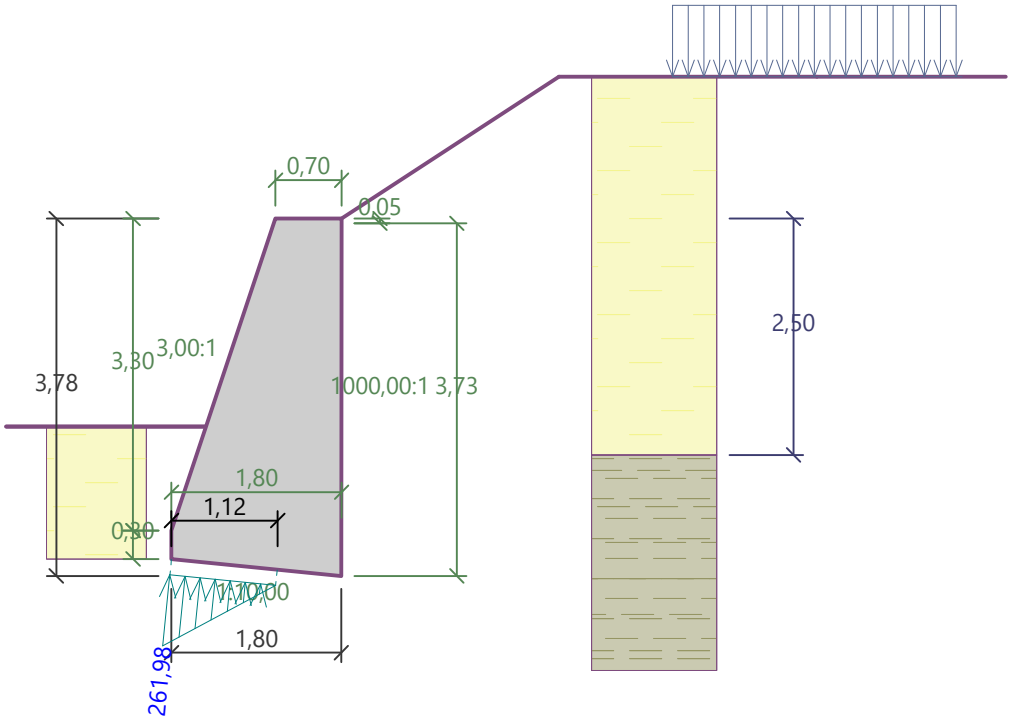

Dimensioning No. 1

Forces acting on construction

Name	F_{hor} [kN/m]	App.Pt. z [m]	F_{vert} [kN/m]	App.Pt. x [m]	Coeff. moment	Coeff. norm.force	Coeff. shear for.
Weight - wall	0,00	-0,05	1,63	0,37	1,000	1,000	1,000
Active pressure	0,00	-0,10	0,00	0,73	1,000	1,000	1,000
Promet	0,10	-0,02	0,07	0,73	1,000	1,000	1,350

Wall check at the construction joint 0,10 m from the wall crest

Cross-section depth h = 0,73 m

Ultimate shear force	V_{Rd}	=	33,62	kN/m	>	0,14	kN/m	= V_{Ed}
Allowable eccentricity of cross section	e_{lim}	=	0,33	m	>	0,02	m	= e
Ultimate compressive force	N_{Rd}	=	301,06	kN/m	>	1,70	kN/m	= N_{Ed}
Ultimate moment	M_{Rd}	=	0,62	kNm/m	>	0,04	kNm/m	= M_{Ed}

Cross-section bearing capacity is SATISFACTORY

[GEO5 - Gravity Wall (32 bit) | version 5.2024.120.0 | hardware key 10619 / 1 | GEOING d.o.o. | Copyright © 2024 Fine spol. s r.o. All Rights Reserved | www.finesoftware.eu]
[Geoportal d.o.o. | + 386(0)1 620 33 20| info@geoportal.si| http://www.geoportal.si]

Name : Dimensioning	Stage - analysis : 1 - 1

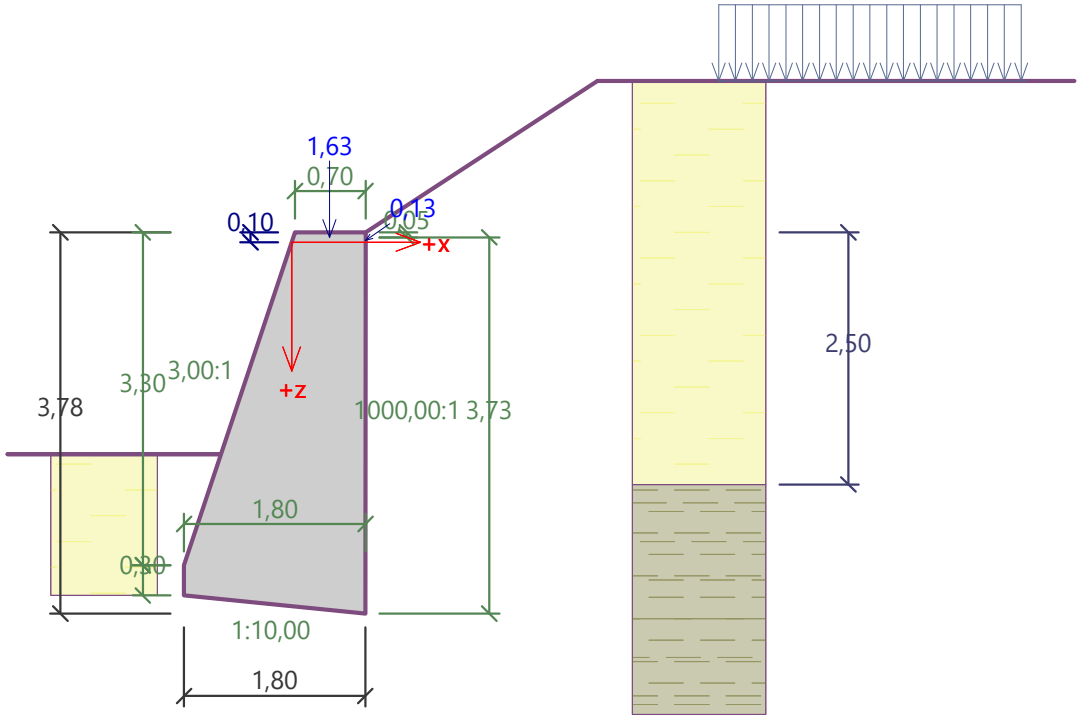

[GEO5 - Gravity Wall (32 bit) | version 5.2024.120.0 | hardware key 10619 / 1 | GEOING d.o.o. | Copyright © 2024 Fine spol. s r.o. All Rights Reserved | www.finesoftware.eu]
[Geoportal d.o.o. | + 386(0)1 620 33 20| info@geoportal.si| http://www.geoportal.si]